TYPE V CONSTRUCTION-WOOD FRAME RESIDENTIAL BUILDINGS
ONE-STORY CONSTRUCTION

TYPE V CONSTRUCTIONS IS A CLASSIFICATION OF BUILDINGS BY CONSTRUCTION MATERIALS AND METHODS. IT IS THE LEAST RESTRICTIVE PERMITTED BY THE CBC AND INCLUDES LIGHT, WOOD-FRAME CONSTRUCTION. THIS SHEET IS FOR INFORMATION AND REFERENCE ONLY AND IS NOT A SUBSTITUTE FOR ACCURATE DRAWINGS PREPARED FOR EACH PROPOSED CONSTRUCTION PROJECT.

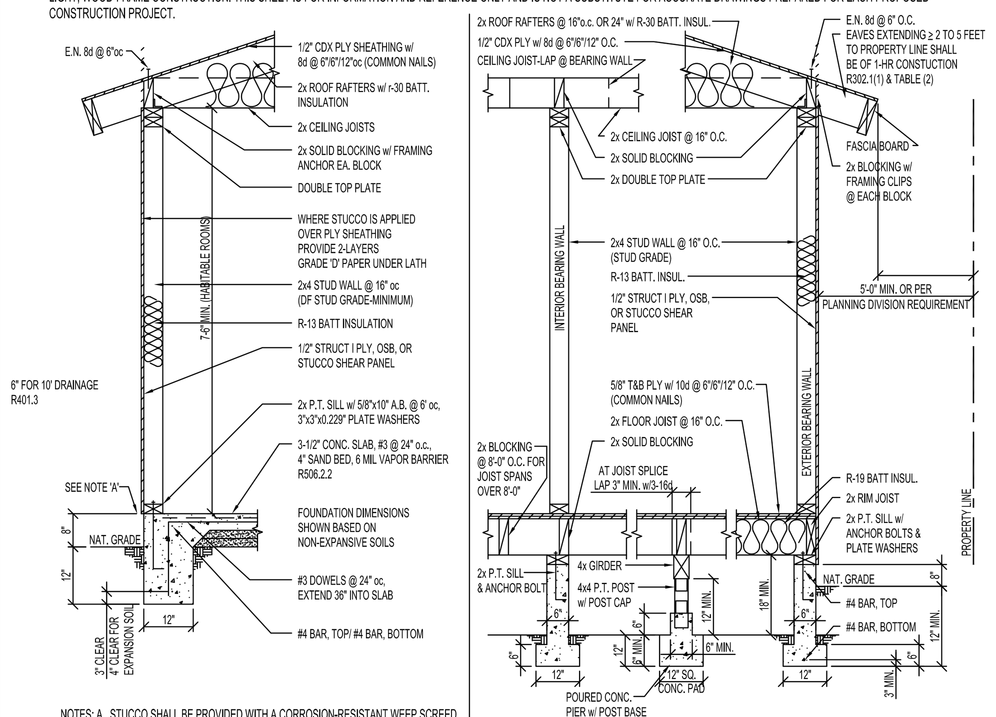

NOTES: A. STUCCO SHALL BE PROVIDED WITH A CORROSION-RESISTANT WEEP SCREED.

WALL SECTION: SLAB-ON-GRADE CONSTRUCTION

WALL SECTION: RAISED FLOOR CONSTRUCTION

FOUNDATION DIMENSIONS SHOWN BASED ON NON-EXPANSIVE SOILS

NOTES:
1. ANCHOR BOLTS: 5/8"x10" EMBEDDED 7" AND SPACED 6'-0" OC WITH 3"x3"x0.229" PLATE WASHERS, WITH MINIMUM 2 ANCHOR BOLTS PER PIECE, LOCATED NOT MORE THEN 12" OR LESS THAN 7 BOLT DIAMETERS FROM EACH END OF THE PIECE.
2. ALL FOUNDATION PLATES OR SILLS AND SLEEPERS ON A CONCRETE OR MASONRY SLAB, WHICH IS IN DIRECT CONTACT WITH EARTH, AND SILLS THAT REST ON CONCRETE OR MASONRY FOUNDATIONS, SHALL BE PRESSURE TREATED WOOD.
3. MINIMUM CONCRETE STRENGTH: 2500 psi
4. BEARING WALLS AND BRACED WALL PANELS REQUIRE CONTINUOUS FOOTINGS.
5. FOR EXPANSIVE SOIL: REFER TO LOCAL JURISDICTION REQUIREMENTS.
6. WHERE INTERIOR WALLS ARE SHEAR WALL PANELS, WALL FRAMING AND SHEATHING SHALL EXTEND TO THE ROOF SHEATHING.
7. UNDER FLOOR AREAS SHALL BE VENTILATED BY APPROVED MECHANICAL MEANS OR BY OPENINGS INTO THE UNDER-FLOOR AREA WALLS. SUCH OPENINGS SHALL HAVE A NET AREA OF NOT LESS THAN 1 SQUARE FOOT FOR EACH 150 SQUARE FEET OF UNDER-FLOOR AREA. OPENINGS SHALL BE LOCATED 3 FEET FROM CORNERS AND PROVIDE VENTILATION. THE OPENINGS SHALL BE APPROXIMATELY EQUALLY DISTRIBUTED ALONG THE LENGTH OF AT LEAST TWO SIDES. CORROSION RESISTANT MESH W/ MINIMUM 1/4" OPENINGS.
8. ENCLOSED ATTICS AND ENCLOSED RAFTER SPACES SHALL HAVE CROSS VENTILATION FOR EACH SEPARATE SPACE. THE NET FREE VENTILATING AREA SHALL NOT BE LESS THAN 1/150 OF THE AREA OF THE SPACE VENTILATED. THE OPENINGS MAY BE 1/300 OF THE AREA PROVIDED 50% OF THE OPENING AREA IS PROVIDED WITH VENTILATORS IN THE UPPER PORTION AT LEAST 3' ABOVE THE EAVE OR CORNICE WITH THE BALANCE OF THE VENTILATORS PROVIDED BY EAVE OR CORNICE VENTS. PROVIDE BAFFLES TO PREVENT ATTIC INSULATION FROM BLOCKING EAVE VENTS.
9. FOR STEM WALLS GREATER THAN 24" HIGH: REFER TO LOCAL JURISDICTION REQUIREMENTS.

BUILDING SECTIONS

BRACED WALL PANEL- 1/2" STRUCTURAL 1 PLY OR OSB, NAILED WITH 8D @ 6": 6": 12" COMMON NAILS

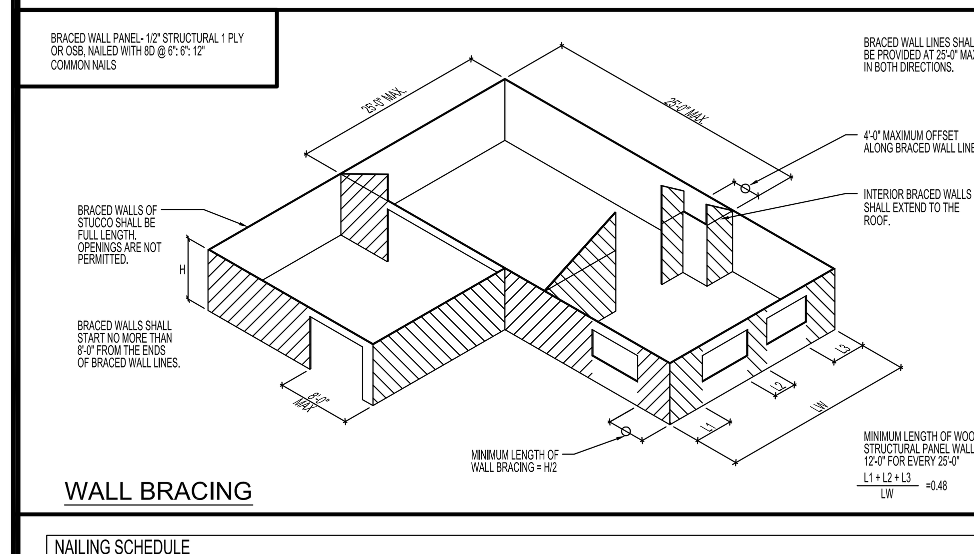

WALL BRACING

NAILING SCHEDULE	
JOIST TO SILL OR GIRDER, TOE NAIL	3-8d
BRIDGING TO JOIST, TOENAIL EACH END	2-8d
SOLE PLATE TO JOIST OR BLOCKING, TYPICAL FACE NAIL	16d @ 16" o.c.
SOLE PLATE TO JOIST OR BLOCKING, AT BRACED WALL PANELS	3-16d per 16"
TOP PLATE TO STUD, END NAIL	2-16d
STUD TO SOLE PLATE	2-16d, END NAIL
DOUBLE STUDS, FACE NAIL	10d @ 24" o.c.
DOUBLE TOP PLATES, TYPICAL FACE NAIL	16d @ 16" o.c.
DOUBLE TOP PLATES, LAP SPLICE	8-16d
BLOCKING BETWEEN JOISTS OT RAFTERS TO TOP PLATE, TOENAIL	3-8d
RIM JOIST TO TOP PLATE, TOENAIL	8d @ 6" o.c.
TOP PLATES, LAPS AND INTERSECTIONS, FACE NAIL	2-10d
CEILING JOISTS TO PLATE, TOENAIL	3-8d
CONTINUOUS HEADER TO STUD, TOENAIL	4-8d
CEILING JOIST, LAPS OVER PARTITIONS, FACE NAIL	3-10d
CEILING JOISTS TO PARALLEL RAFTERS, FACE NAIL	3-10d
RAFTER TO PLATE, FACE NAIL	3-8d
BUILT-UP CORNER STUDS	10d @ 24" o.c.
2" PLANKS	2-16d @ EACH BEARING

FASTENER NAILING SCHEDULE R602.3(1)

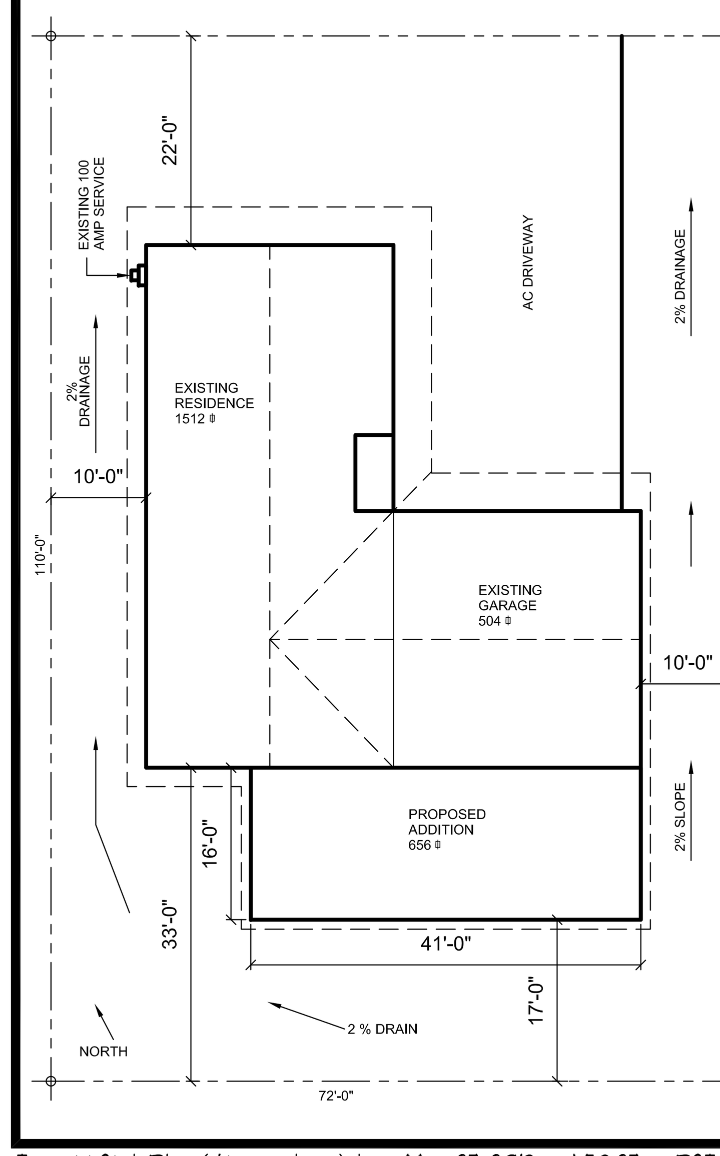

ADDRESS: ____
ASSESSPR PARCEL No. ____
LOT No.: ____
Tr. No.: ____
ROOM ADDITION FOR:

NOTE: REAR YARD DETERMINATION

LOT DEPTH = 110'

REQUIRED REAR YARD SETBACK: 110' x .25 = 27.5'

HOWEVER MAXIMUM REQUIRED IS 25'.

THIS ADDITION WOULD REQUIRE A "VARIENCE" FOR REAR YARD SETBACK.

BASICALLY A LEVEL LOT.

NOTE: LOT COVERAGE % DIVIDING TOTAL AREA OF ALL BY LOT.

PLOT PLAN SCALE: 1/16"=1'-0"

LOT AREA
EXISTING COVERAGE
ADDITION
TOTAL

*PLOT PLAN (SITE PLAN) SHOWING SIZE AND LOCATION OF LOT (ADDRESS, LOT, TRACT, AND ASSESSOR PARCEL NUMBERS), ALL EXISTING BUILDINGS, PROPOSED CONSTRUCTION IN RELATION TO PROPERTY LINES (SETBACK), EASEMENTS, ARROWS SHOWING DIRECTION OF LOT DRAINAGE, ELECTRICAL SERVICE LOCATION, AND LOT COVERAGE INFORMATION (SQUARE FOOTAGE EXISTING AND PROPOSED STRUCTURES AND LOT DIMENSION.

Slope away 6" for first 10 feet

SAMPLE SITE PLAN

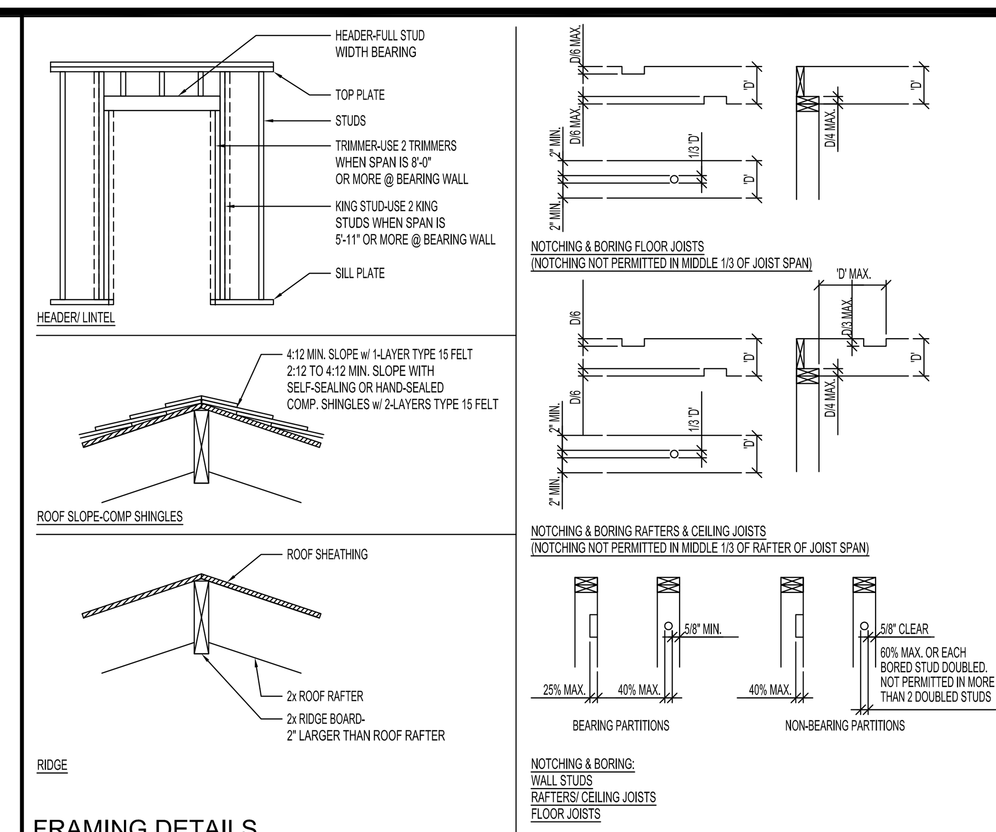

FRAMING DETAILS

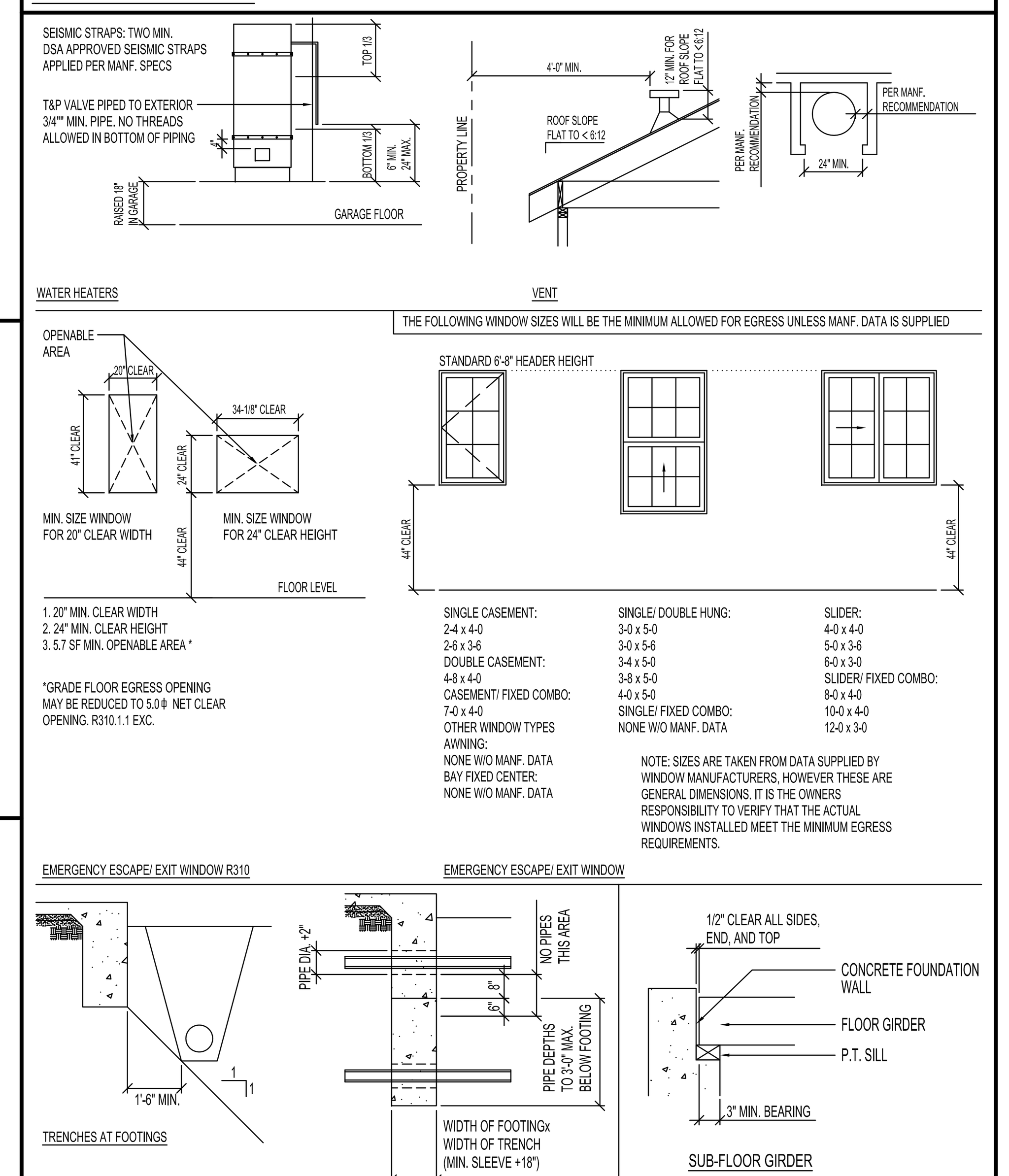

MISC. DETAILS

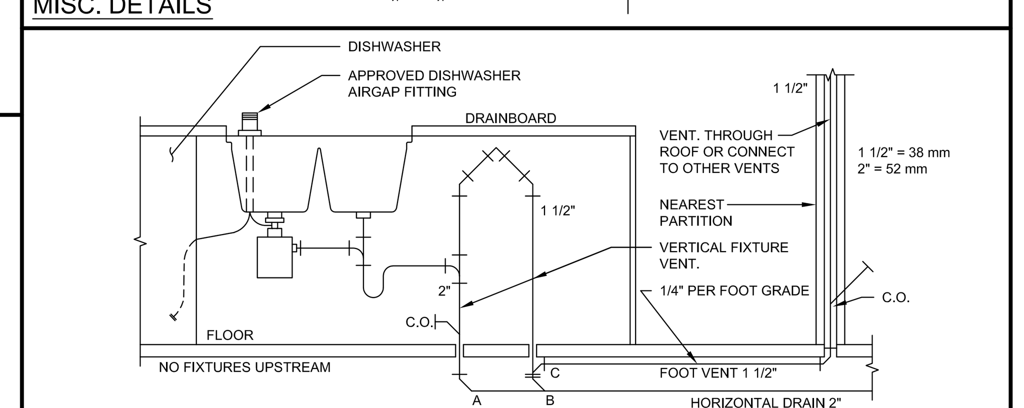

ISLAND VENT

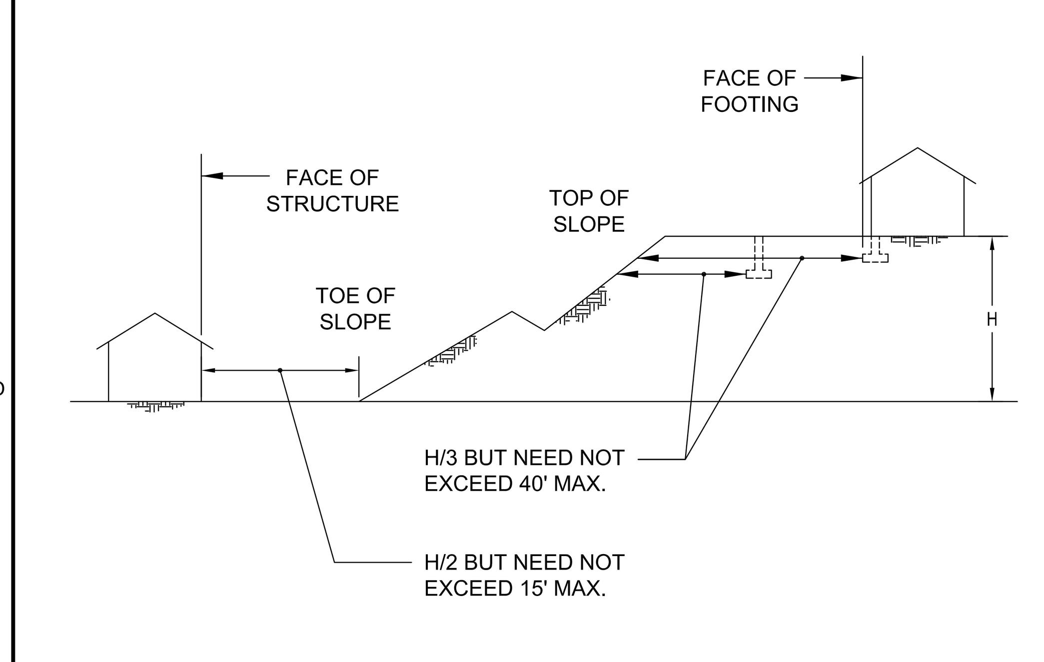

MINIMUM SLOPE SETBACK T-R403.1.7.1

INSTRUCTIONS FOR USING THIS SHEET

City of Atascadero
Community Development Department
PUBLIC INFORMATION - BUILDING SERVICES
Community Development Department 6907 El Camino Real Atascadero, CA 93422
phone (805) 461-5035 fax (805) 461-7612

TYPE V CONSTRUCTION GENERAL NOTES AND DETAILS FOR RESIDENTIAL CONSTRUCTION PROJECTS BASED ON THE 2010 CALIFORNIA RESIDENTIAL CODE

Type V construction is a classification of buildings based on construction materials and methods. It is the lease restrictive construction type permitted by the California Building Codes and includes light, wood-framed construction. This sheet is for information and reference purpose only, and is not a substitute for complete, accurate drawings prepared specifically for each proposed construction project.

This sheet may be used in conjunction with projects designed and reviewed under the 2010 California Residential Code. This sheet is intended to expedite plan review while at the same time promoting safe, healthy, code compliant construction, by providing standard notes and details associated with most California Residential Code projects.

It is understood that all of the notes and details contained on this Type V Sheet do not apply to all residential projects. By signing and attaching this sheet to prepared plans, the applicant acknowledges that he/she has reviewed the notes and details contained on this sheet, and understands and agrees that all notes and details are a part of the approved plans and required for the project as applicable. The applicant also acknowledges that an omission of a note or detail on this sheet does not allow for a noncompliant field condition.

Instructions:

1. Review submittal requirements based on the type of project you are designing, such as single-family-residence, residential addition, detached accessory structure, etc. Submittal checklists may be downloaded on-line at www.atascadero.org, or you may visit the permit center at Atascadero City Hall, 6907 El Camino Real, or you may call the permit center at 461-5035 and staff will mail or email you a copy.
2. Prepare all necessary plan sheets and documents for your project as listed on the submittal checklist, including site plan, floor plan, foundation plan, elevations, framing details, soils report, T-24 energy report, etc. Complete the description of scope of work, and list all prepared sheets below.
3. Fill in the building data and structural data on the Type V Sheet, complete the plan sheet table of contents, sign the applicant signature line, and attach your prepared sheets to the Type V Cover Sheet. Each sheet must be signed by the preparer.
4. Contact the Permit Center at 461-5035 to schedule an intake meeting for your application and plan submittal. Please bring in the number of plan sets indicated on the submittal checklist.

The City of Atascadero hopes you find this Type V Sheet helpful in quickly processing your application, useful in avoiding code compliance problems during construction, and efficient in keeping you, your family and/or your client safe and healthy during occupancy.

Plan Sheet Table of Contents:

1. Type V Cover Sheet
2. ____
3. ____
4. ____
5. ____
6. ____
7. ____

Applicant Signature: ____
By signing this sheet applicant acknowledges that he/she has read and understands all notes and details contained herein, and agrees that all notes and details are a part of the approved plans.

SITE PLAN:

1. ADDRESS SHALL BE PLAINLY VISIBLE AND LEGIBLE FROM THE STREET OR ROAD FRONTING THE DWELLING. R319
2. LANDING AT EXTERIOR DOORS: PROVIDE A LANDING EQUAL TO THE WIDTH OF THE DOOR OR STAIR AND A LENGTH IN THE DIRECTION OF TRAVEL EQUAL TO 36". R311.7.5, R311.3

FOUNDATIONS:

3. USE FOUNDATION GRADE PRESSURE-TREATED FOUNDATION PLATES AND SILLS. R402.1.2
4. ALL STRUCTURAL WOOD MATERIAL EXPOSED TO WEATHER TO BE PRESSURE-TREATED. THIS INCLUDES ALL VERTICAL AND HORIZONTAL MEMBERS OF DECK CONSTRUCTION UNLESS A ROOF SYSTEM IS USED. R402.1.2
5. BOLT FOUNDATION PLATES AND SILLS TO THE FOUNDATION WITH 5/8" BOLTS SPACED NOT MORE THAN 6' APART. PROVIDE MIN. 2 BOLTS PER PIECE AND WITHIN 12" OF ENDS. EMBED BOLTS AT LEAST 7" IN CONCRETE OR MASONRY. USE 3" SQUARE x 0.229" THICK MINIMUM PLATE WASHERS ON EACH ANCHOR BOLT.
6. PROVIDE UNDER-FLOOR VENTILATION EQUAL TO 1 sq. ft. FOR EACH 150 sq. ft. OF UNDER-FLOOR AREA. VENTILATION OPENINGS SHALL BE APPROXIMATELY EQUALLY AND WITHIN 3 FEET OF EACH CORNER. R408.1
7. PROVIDE 18" x 24" UNDER-FLOOR ACCESS OPENING. R408.4
8. DAMPPROOF FOUNDATION WALLS ENCLOSING A BASEMENT BELOW FINISHED GRADE BY AN APPROVED METHOD. R406.1
9. THE MINIMUM THICKNESS FOR CONCRETE FLOOR SLABS SUPPORTED DIRECTLY ON THE GROUND SHALL BE NOT LESS THAN 3 1/2". FIG. R403.1 (1)

FRAMING:

10. ALL LUMBER, WOOD STRUCTURAL PANELS, PARTICLE-BOARD, STRUCTURAL GLUED-LAMINATED TIMBER, END-JOINTED LUMBER, FIBERBOARD SHEATHING, HARDBOARD SIDING, PILES AND POLES SHALL BE IDENTIFIED BY THE GRADE MARK OR A CERTIFICATE OF INSPECTION ISSUED BY AN APPROVED AGENCY. R602.1
11. WOOD STRUCTURAL PANEL ROOF SHEATHING SHALL BE BONDED BY INTERMEDIATE GLUE UNLESS THE SHEATHING IS EXPOSED ON THE UNDERSIDE, IN WHICH CASE IT SHALL BE BONDED WITH EXTERIOR GLUE.
12. NO HORIZONTAL BORING FOR DWV PLUMBING IN 2x4 FRAMED WALLS. R602.6 USE 2x6 OR DOUBLE WALL.
13. FIREBLOCKING SHALL BE PROVIDED IN CONCEALED SPACES OF STUD WALLS AND PARTITIONS AT 10 FOOT INTERVALS HORIZONTALLY AND VERTICALLY AT CEILING AND FLOOR LEVELS. R302.11
14. PROVIDE 20"x30" ATTIC ACCESS IN HALLWAY. R807.1 ACCESS MUST BE 30"x30" IF NECESSARY TO REMOVE MECHANICAL EQUIPMENT. CMC904.11
15. ROOF TRUSSES, RAFTERS, AND CEILING JOISTS SHALL BE SUPPORTED LATERALLY AT POINTS OF BEARING BY SOLID BLOCKING TO PREVENT LATERAL DISPLACEMENT AND ROTATION. ENGINEERED DESIGN FOR TRUSSES TO BE ON SITE. BRACING PER MANUFACTURER'S REQUIREMENTS.
16. INSTALL HURRICANE CLIPS AT EVERY TRUSS OR RAFTER OR PER MANUFACTURER'S INSTRUCTIONS.
17. PURLINS AND STRUTS SHALL BE SUPPORTED BY BEARING WALLS.
18. PROVIDE RAFTER TIES WHERE CEILING JOISTS AND RAFTERS ARE NOT PARALLEL.
19. PROVIDE ATTIC VENTILATION AREA EQUAL TO THE CEILING AREA DIVIDED BY 150 (1/150th). IF AT LEAST 50% OF THE VENT AREA IS LOCATED IN THE UPPER PORTION, THEN THE AREA MAY BE REDUCED TO 1/300th OF THE CEILING AREA. R806.2. PROTECT WITH 1/4" GALVANIZED SCREEN.
20. CUTTING, NOTCHING, OR BORING SHALL NOT EXCEED 25% OF THE STRUCTURAL MEMBER UNLESS SPECIFIED IN R602.6 (SEE FRAMING DETAILS - THIS SHEET)
21. STUCCO WEEP SCREEDS SHALL BE MINIMUM 4" ABOVE SOIL OR 2" ABOVE PAVED SURFACE. R703.6.2.1
22. THE SIZE, HEIGHT, AND SPACING OF WOOD STUDS SHALL NOT EXCEED TABLE R602.3.1 UNLESS JUSTIFIED BY AN ANALYSIS. R602.3.5

FLOOR PLANS & GENERAL REQUIREMENTS:

23. FLOOR PLAN SHOWING USE OR OCCUPANCY OF ALL PARTS OF THE ADDITION, PLACEMENT OF ELECTRICAL, PLUMBING AND HEATING OUTLETS AND FIXTURES, DOOR WITH DIRECTION FOR SWING, AND LOCATIONS AND SIZE OF WINDOWS AND HEADERS. INCLUDE IMMEDIATELY ADJOINING ROOMS TO THE ADDITION, THE USE, EXISTING WINDOW SIZES AND ANY WINDOWS REMOVED, SHOW EXISTING, DEMO, AND NEW WALL LOCATIONS.
24. PROVIDE EXTERIOR GLAZED OPENINGS FOR 8% OF THE FLOOR AREA. FOR NATURAL LIGHT IN HABITABLE ROOMS. R303.1
25. PROVIDE OPENABLE EXTERIOR OPENINGS OF 4% OF THE FLOOR AREA. FOR NATURAL VENTILATION IN HABITABLE ROOMS. R303.1
26. PROVIDE AT LEAST ONE WINDOW OR EXTERIOR DOOR APPROVED FOR EMERGENCY ESCAPE OR RESCUE FROM BASEMENTS AND FROM EVERY ROOM USED FOR SLEEPING PURPOSES. WINDOWS TO BE 20" MINIMUM WIDTH, 24" MINIMUM HEIGHT, 5.7 sq. ft. (5' FOR GRADE FLOOR), MINIMUM OPENING AREA, AND 44" MAXIMUM SILL HEIGHT ABOVE THE FINISHED FLOOR. R310 (SEE MISC. DETAILS - THIS SHEET)
27. 7'-0" MINIMUM HEADROOM IS REQUIRED IN HABITABLE AREAS. R305.1
28. MINIMUM ROOM SIZES: AT LEAST ONE 120 sq. ft. ROOM IS REQUIRED. OTHER HABITABLE ROOMS SHALL BE A MIN. 70 sq. ft. WITH A 7'-0" MINIMUM WIDTH IN ANY DIRECTION. R304 (EXCEPT KITCHENS)
29. PROVIDE SAFETY GLAZING IN DOORS AND WINDOWS IN ANY WALL WITHIN A 24" ARC OF EITHER EDGE OF THE DOOR IN THE CLOSED POSITION, AND ANY DOORS OR ENCLOSURE FOR TUB OR SHOWER OR SIMILAR APPLICATION. SHOWER DOORS SHALL OPEN OUTWARD. TEMPERED GLASS WITHIN 18" TO FINISH FLOOR, TEMPERED GLASS IN STAIR WAYS, LANDINGS, AND RAMPS 36" HORIZ. AND LESS THAN 60" ABOVE FINISH FLOOR R308.4
30. WATER-RESISTANT GYPSUM BACKING BOARD COMPLYING WITH ASTM C 840 SHALL BE USED WHEN GYPSUM IS USED FOR A BASE FOR TILE OR WALL PANELS FOR A TUB, SHOWER, OR WATER CLOSET COMPARTMENT WALLS. R307.2. MIN. 72" HEIGHT.
31. INTENTIONALLY LEFT BLANK
32. ENCLOSED, USABLE SPACE UNDER STAIRS TO BE PROTECTED WITH 1/2" GYP BOARD. R302.7
33. NEW DWELLINGS AND/ OR REMODEL OR ADDITIONS w/ COST IN EXCESS OF $1000.00 SHALL BE PROVIDED WITH APPROVED SMOKE DETECTORS AND CO DETECTORS LOCATED IN ACCORDANCE WITH R314 AND R315. INSTALL SMOKE DETECTORS IN EACH STORY, HALLWAY, EACH SLEEPING ROOM, AND IN BASEMENTS. CARBON MONOXIDE ALARMS OUTSIDE EACH SLEEPING AREA, EVERY LEVEL, AND BASEMENTS.NEW CONSTRUCTION TO BE HARDWIRED & INTERCONNECTED.
34. OPENINGS ARE NOT ALLOWED FROM GARAGES INTO ROOMS USED FOR SLEEPING PURPOSES. R302.5.1
35. 5/8" TYPE "X" GWB (OR EQUIVALENT) IS REQUIRED TO SEPARATE GARAGE FROM HABITABLE ROOMS ABOVE. 1/2" FOR SUPPORT WALLS FOR AFFECTED CEILINGS. POSTS AND BEAMS: ONE LAYER ON ALL EXPOSED SURFACES. CEILINGS: T-R302.6
36. USE FIRE DAMPERS, OR USE 26-GAUGE METAL DUCTS, WHERE FIREWALL OF GARAGE IS PIERCED BY F.A.U. DUCTS. R302.5.2
37. SPECIFY SELF-CLOSING, TIGHT-FITTING, 1 3/8" SOLID WOOD DOOR OR 20 MINUTE LABELED DOOR FOR OPENING BETWEEN GARAGE AND DWELLING. R302.5.1
38. STAIRWAYS: MAXIMUM RISE 7 3/4", MINIMUM TREAD 10", MINIMUM HEADROOM 6'-8", MINIMUM WIDTH 36". R311.7.4.
39. PROVIDE A 1 1/4"-2" DIA. GRIPPABLE HANDRAIL FOR STAIRWAYS ON AT LEAST ONE SIDE. TERMINATE AT A NEWEL POST, WALL, OR SAFETY TERMINAL. HANDRAILS SHALL HAVE A MIN. SPACE FROM WALL OF 1 1/2" AND BE BETWEEN 34"-38" ABOVE THE TREAD NOSING. R311.7.7
40. UNENCLOSED FLOOR AND ROOF OPENING, OPEN AND GLAZED SIDE OF STAIRWAYS, BALCONIES AND PORCHES 30" OR MORE ABOVE GRADE SHALL BE PROTECTED BY A GUARDRAIL OF 42" HEIGHT. R312.2
41. PROVIDE 36" LANDINGS AS MEASURED IN THE DIRECTION OF TRAVEL. LANDING WIDTH SHALL BE AS WIDE AS THE DOOR. R311.7.5

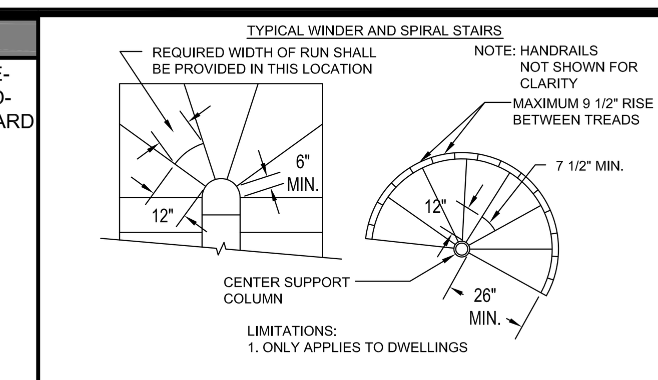

42. LOCATE THE TOP OF THE CHIMNEY AT LEAST 2 FEET ABOVE ANY ROOF WITHIN 10 FEET OF CHIMNEY AND 3 FEET ABOVE ROOF WHERE IT PASSES THRU. R1003.3.9
43. THE CHIMNEY SHALL BE EQUIPPED WITH A SPARK ARRESTER. THE NET FREE AREA OF THE SPARK ARRESTER SHALL BE NOT LESS THAN 4 TIMES THE NET FREE AREA OF THE OUTLET OF THE CHIMNEY. SPARK ARRESTER SCREEN SHALL BE CORROSION RESISTANT AND SHALL HAVE OPENINGS LESS THAN 1/2 INCH AND GREATER THAN 3/8 INCH IN SIZE. IT SHALL BE REMOVABLE FOR CLEANING. R1003.9.1

WEATHER PROTECTION:

44. ALL WEATHER EXPOSED SURFACES SHALL HAVE AN APPROVED WEATHER-RESISTIVE BARRIER UNDER THE SIDING, OR BE OF APPROVED WEATHER PROOF PANELS. TWO LAYERS OF 15# FELT OVER PLYWOOD PANELS. R703.6.3
45. BALCONIES, LANDINGS, EXTERIOR STAIRWAYS, AND SIMILAR SURFACES EXPOSED TO THE WEATHER AND SEALED UNDERNEATH SHALL BE WATERPROOFED WITH ICC APPROVED MATERIALS AND SLOPED A MINIMUM OF 1/4" PER FOOT FOR DRAINAGE.
46. PROVIDE MINIMUM NO. 26 GALVANIZED SHEET GAUGE CORROSION-RESISTANT METAL ON ROOF VALLEY FLASHING, WHICH SHALL ALSO EXTEND AT LEAST 12" FROM THE CENTERLINE EACH WAY. SECTIONS OF FLASHING SHALL HAVE AND END LAP OF NOT LESS THAN 4". R905.2.8.2

PLUMBING:

47. SPECIFY COPPER WATER LINES SHALL BE TYPE L MINIMUM. ABOVE & UNDERGROUND.
48. SHOWERS, BATH TUBS, WHIRLPOOL AND SHOWER-TUB COMBINATIONS SHALL BE PROVIDED WITH INDIVIDUAL CONTROL VALVES OF THE PRESSURE BALANCE OR THERMOSTATIC MIXING VALVE TYPE. ASSE 1070, CPC, Sec. 418
49. INDICATE ON THE PLANS THAT HOSE BIBS SHALL BE FITTED WITH A NON-REMOVABLE BACK FLOW DEVICE. CPC 603.4.7.
50. ANCHOR OR STRAP WATER HEATERS AT 1/3 FROM TOP AND BOTTOM. CPC, Sec. 508.2.
51. PLUMBING WHEN CHANGING A WATER HEATER TO A TANKLESS HEATER, "THE EXISTING PIPING SHALL BE CHECKED TO DETERMINE IF IT IS ADEQUATE CAPACITY (SEE SECTION 1209.9.3) 508.20 C.P.C. WHERE INADEQUATE, THE EXISTING SYSTEM SHALL BE ENLARGE AS NECESSARY, OR SEPERATE GAS PIPEING OF ADEQUATE CAPACITY SHALL BE RUN FROM THE POINT OF DELEVERY TO THE APPLIANCE. 508.20
52. SHOWERS TO BE LARGE ENOUGH TO INSCRIBE MINIMUM 30" DIAMETER CIRCLE AND A MINIMUM OF 1,024 sq. in. SHOWER OPENING MIN. 22" CPC, Sec. 411.6
53. FLUSH VOLUMES FOR WATER CLOSETS SHALL BE 1.28 GAL PER CPC, SEC. 402.2. SHOWER HEADS SHALL NOT EXCEED 2.5 GPM 402.1.1 CPC
54. INSTALL BUILT-UP SHOWER PANS PER CPC, SEC. 411.8. OR USE AN APPROVED LISTED MATERIAL
55. WATER HEATERS LOCATED IN AN ATTIC OR ABOVE A CEILING, FLOOR-CEILING OR FLOOR-SUB-FLOOR ASSEMBLY WHERE DAMAGE MAY RESULT FROM A LEAK, A WATERTIGHT PAN OF CORROSION RESISTANT MATERIALS SHALL BE INSTALLED BENEATH THE WATER HEATER WITH A MINIMUM 3/4" DRAIN TO AN APPROVED LOCATION PER CPC, SEC. 508.4.
56. BATHS TO HAVE 12" ACCESS OR 1 PIECE TRAP. PER CPC, SEC. 404.2.
57. GAS UTILIZATION EQUIPMENT LOCATED IN RESIDENTIAL GARAGES SHALL BE LOCATED OR PROTECTED SO IT IS NOT SUBJECT TO PHYSICAL DAMAGE BY A MOVING VEHICLE PER CPC, SEC. 508.14(2).
58. SANITARY DRAINAGE SYSTEMS TO BE SIZED AND INSTALLED PER CPC, CHAPTER 7.
59. GAS PIPING TO BE SIZED PER CPC, T-12-8 AND INSTALLED PER CPC, CHAPTER 12
60. INTENTIONALLY LEFT BLANK

ELECTRICAL:

61. SHOW ON THE FLOOR PLAN OR ON A SEPARATE ELECTRICAL PLAN THE LOCATION OF MAIN AND SUB PANEL BOARDS ELECTRICAL RECEPTACLES AND LIGHTING FIXTURES. GENERALLY, RECEPTACLES ARE TO BE LOCATED IN A WALL EVERY 12 LINEAR FEET SO THAT A FIXTURE WILL NOT BE MORE THAN 6 FEET FROM ANY RECEPTACLE. PER CEC, ART. 210-52(A)(1).
62. PROVIDE GFCI PROTECTION FOR ALL RECEPTACLES IN THE FOLLOWING LOCATIONS PER CEC, ART 210.8(A)
    1. BATHROOM(S)
    2. GARAGES AND ACCESSORY BUILDINGS.
    3. OUTDOORS.
    4. CRAWL SPACES-AT OR BELOW GRADE LEVEL.
    5. UNFINISHED BASEMENTS.
    6. KITCHENS SERVING COUNTERTOPS.
    7. LAUNDRY, UILITY, AND WET BAR SINKS WHERE RECEPTACLES ARE WITHIN 6FT.
    8. BOAT HOUSES
63. ALL 15 AND 20 AMP RECEPTICALS (INCLUDING GFCI'S) SHALL BE TAMPER-RESISTANT. CEC 406.11
64 PROVIDE A MINIMUM OF ONE WALL SWITCH CONTROLLED LIGHTING OUTLET IN EVERY HABITABLE ROOM, BATHROOMS, HALLWAYS, STAIRWAYS AND GARAGES PER CEC, ART. 210-70(A)(1)&(2).
65. ALL 120-VOLT, SINGLE PHASE, 15- AND 20- AMPERE BRANCH CIRCUITS SUPPLYING OUTLETS INSTALLED IN DWELLING UNIT BEDROOMS, FAMILY, LIVING, DINING ROOMS, PARLORS, LIBRARIES, DENS, RECRATION ROOMS, CLOSETS, HALL WAYS, AND SIMULAR AREAS OR ROOMS SHALL BE PROTECTED BY A LISTED ARC-FAULT CIRCUIT INTERRUPTER, COMBINATION TYPE INSTALLED TO PROVIDE PROTECTION OF THE BRANCH CIRCUITS. CEC, ART. 210.12(B)
66. PROVIDE A CONCRETE-ENCASED ELECTRODE FOR NEW ELECTRICAL PANELS PER ART. 250-52 (A)(3). (WHERE A NEW FOOTING IS AVAILABLE)
67. LIGHTS IN KITCHENS SHALL BE HIGH EFFICACY LUMINARIES. UP TO 50% OF THE WATTAGE OF PERMANENTLY INSTALLED LUMINARIES IN KITCHENS MAY BE IN LUMINARIES THAT ARE NOT HIGH EFFICACY LUMINARIES, PROVIDED THAT THESE LUMINARIES ARE CONTROLLED BY SWITCHES SEPARATE FROM THOSE CONTROLLING THE HIGH EFFICIENCY LUMINARIES.

ENERGY:

68. LIGHTS IN BATHROOMS, GARAGES, LAUNDRY ROOMS, AND UTILITY ROOMS MUST BE HIGH EFFICACY OR CONTROLLED BY A 'MANUAL-ON' MOTION SENSOR.
69. LIGHTS IN ALL HABITABLE ROOMS MUST BE HIGH EFFICACY, OR CONTROLLED BY A 'MANUAL-ON' MOTION SENSOR, OR CONTROLLED BY A DIMMER.
70. ALL OUTDOOR LIGHTING ATTACHED TO BUILDINGS MUST BE HIGH EFFICACY OR CONTROLLED BY BOTH A MOTION SENSOR AND PHOTOCONTROL.
71. OUTDOOR LIGHTING ATTACHED TO A BUILDING SHALL HIGH EFFICACY OR CONTROLLED BY A MOTION SENSOR WITH INTEGRAL PHOTO CONTROL PER CENC, SEC. 150(D)(6).
72. RECESSED LIGHTING IN INSULATED CEILINGS SHALL BE APPROVED FOR ZERO CLEARANCE INSULATION COVER (IC TYPE) BY UL PER CENC, SEC. 150(K)(5).
73. AIR DISTRIBUTION DUCTS SHALL BE INSULATED TO A MINIMUM OF R-4.2 (OR HIGHER LEVEL REQUIRED BY CMC SEC. 605) OR BE ENCLOSED ENTIRELY BY CONDITIONED SPACE. JOINTS SHALL BE SEALED WITH MASTIC, TAPE AND MECHANICAL FASTENOR, OR OTHER SYSTEM MEETING REQUIREMENTS OF UL 181, 181A, OR 181B OR AEROSOL SEALANT THAT MEETS UL 723 PER CENC, SEC. 150 (M) TAPES MUST BE MARKED WITH U1181

MECHANICAL:

74. APPLIANCES INSTALLED IN GARAGES SUBJECT TO MECHANICAL DAMAGE SHALL BE GUARDED AGAINST BY BEING INSTALLED BEHIND PROTECTIVE BARRIERS OR BY BEING ELEVATED OR LOCATED OUTOF THE NORMAL PATH OF VEHICLES PER CMC, SEC. 307.1.
75. HEATING AND COOLING EQUIPMENT LOCATING GAUGE & GENERATE A GLOW SPARK, OR FLAME SHALL BE A MINIMUM OF 18" ABOVE THE FLOOR LEVEL PER CMC, SEC. 307.1.
76. DUCTS USED FOR DOMESTIC KITCHEN RANGE VENTILATION SHALL BE OF METAL AND SHALL HAVE SMOOTH INTERIOR SURFACES. DUCTS FOR DOMESTIC RANGE HOODS SHALL ONLY SERVE COOKING APPLIANCES. SEC. 504.2
77. ENVIRONMENTAL AIR DUCT EXHAUSTS SHALL TERMINATE AT LEAST 3 FEET FROM OPENINGS INTO THE BUILDING. CMC 504.5.
78. UNLESS OTHERWISE PERMITTED OR REQUIRED BY THE DRYER MANUFACTURER'S INSTALLATION INSTRUCTIONS AND APPROVED BY THE AUTHORITY HAVING JURISDICTION, DOMESTIC DRYER MOISTURE EXHAUST DUCTS SHALL NOT EXCEED A TOTAL COMBINED HORIZONTAL AND VERTICAL LENGTH OF FOURTEEN (14) FEET (4,263 mm), INCLUDING TWO (2) 90 DEGREE (1.57 rad) ELBOWS. TWO (2) FEET (610 mm) SHALL BE DEDUCTED FOR EACH 90 DEGREE (1.57 rad) ELBOW IN EXCESS OF TWO. SEC 5.4.3.2.2
79. (A) AN ATTIC OF UNDER-FLOOR SPACE IN WHICH AN APPLIANCE IS INSTALLED SHALL BE ACCESSIBLE THROUGH AN OPENING AND PASSAGEWAY AT LEAST AS LARGE AS THE LARGEST COMPONENT OF THE APPLIANCE, AND NOT LESS THAN TWENTY-TWO (22) INCHES x THIRTY (30) INCHES. (NFPA 54-09:9.5.1) SEC. 904.11.1
(B) WHERE THE HEIGHT OF THE PASSAGEWAY IS LESS THAN SIX (6) FEET, THE DISTANCE FROM THE PASSAGEWAY ACCESS TO THE APPLIANCE SHALL NOT EXCEED TWENTY (20) FEET MEASURED ALONG THE CENTER LINE OF THE PASSAGEWAY. (NFPA 54-09:9.5.1.1) SEC. 904.11.2
(C) THE PASSAGEWAY SHALL BE UNOBSTRUCTED AND SHALL HAVE SOLID FLOORING NOT LESS THAN TWENTY-FOUR (24) INCHES WIDE FROM THE ENTRANCE OPENING TO THE APPLIANCE. (NFPA 54:9.5.1.2) SEC. 904.11.3
(D) A LEVEL WORKING PLATFORM OR GRADE SURFACE NOT LESS THAN THIRTY (30) INCHES BY THIRTY (30) INCHES SHALL BE PROVIDED IN FRONT OF THE SERVICE SIDE OF THE APPLIANCE. (NFPA 54:9.5.2) SEC. 904.11.4
(E) A PERMANENT 120-VOLT RECEPTACLE OUTLET AND A LIGHTING FIXTURE SHALL BE INSTALLED NEAR THE APPLIANCE. THE SWITCH CONTROLLING THE LIGHTING FIXTURE SHALL BE LOCATED AT THE ENTRANCE TO THE PASSAGEWAY. (NFPA 54:9.5.3) SEC. 904.11.5
80. BUILDING CAVITIES, SUPPORT PLATFORMS FOR AIR HANDLERS AND PLENUMS CONSTRUCTED OF MATERIAL OTHER THAN SEALED SHEET METAL, DUCT BOARD OR FLEXIBLE DUCT SHALL NOT BE USED FOR CONVEYING CONDITIONED AIR PER CENC, SEC. 150(M).

BUILDING DATA

ASSESSORS PARCEL #: ____
DESCRIPTION OF USE: ____
OCCUPANCY GROUP: ____
TYPE OF CONSTRUCTION: ____
SPRINKLERS: YES OR NO: ____
STORIES: ____
HEIGHT: ____
FLOOR AREAS: ____
GARAGE AREA: ____
TOTAL AREA: ____

PROVIDE A COMPLETE DESCRIPTION OF THE SCOPE OF WORK:

STRUCTURAL DATA

ROOF/FLOOR LIVE LOAD	/ PSF
SITE CLASS	
SEISMIC DESIGN CATEGORY	D
BASIC WIND SPEED	85 MPH
WIND EXPOSURE	C

A SEPARATE PERMIT WILL BE REQUIRED FOR RETAINING WALLS, FENCES, PLUMBING, MECHANICAL, AND ELECTRICAL WORK AS APPLICABLE.

APPLICATION # :
PERMIT # :
ADDRESS:

TYPE V COVER SHEET

"THESE CODE REQUIREMENTS GOVERN ANY ERRORS SHOWN ON OTHER PLANS."

CITY OF ATASCADERO

FOUNDED 1913 INCORPORATED 1979 ATASCADERO